Installation Guide

This document provides formal installation instructions for Natre Nordic Edge fire-rated windows, including both inward-opening and fixed configurations in fire classes EI30 and EI60.

Product Specifications

- Natre Nordic Edge inward-opening as a standalone EI30 fire-rated window.
- Natre Nordic Edge fixed as a standalone fixed frame or as a combination of elements in fire class EI30 or EI60.

Installation Instructions

1. The gap between the outer frame and the wall must not exceed 15 mm or be less than 10 mm.
2. The window must be shimmed using the standard method for windows and fastened with 7.5x132 mm frame screws (for concrete/masonry walls) or 6.0x100 mm wood screws (for wooden walls).
3. The gap between the frame and the wall must be tightly packed with mineral wool or filled with fire-rated foam. It must then be sealed with tape on both the exterior and interior sides. Alternatively, fire-rated sealant and backer rod may be used. See attached drawings.
4. Modifications to the window construction MUST NOT be made without written permission from the window manufacturer.
5. The attached drawings show the approved installation methods.
6. The person responsible for window installation on site MUST verify that this installation guide has been followed and must record the month, year, and signature.

Important Notes

Openable fire-rated windows must ONLY be opened for cleaning and/or maintenance.
The janitor handle MUST be stored separately from the window.

Installer Verification

I hereby confirm that the installation has been carried out in accordance with the instructions provided above.

Date:

Signature:

THIS DOCUMENTATION MUST BE RETAINED AS A CONSTRUCTION RECORD
AND MUST BE AVAILABLE FOR PRESENTATION UPON REQUEST.

Natre Vinduer AS
Engenvegen 1
2827 Hunndalen

Version 2, 6.11.2026

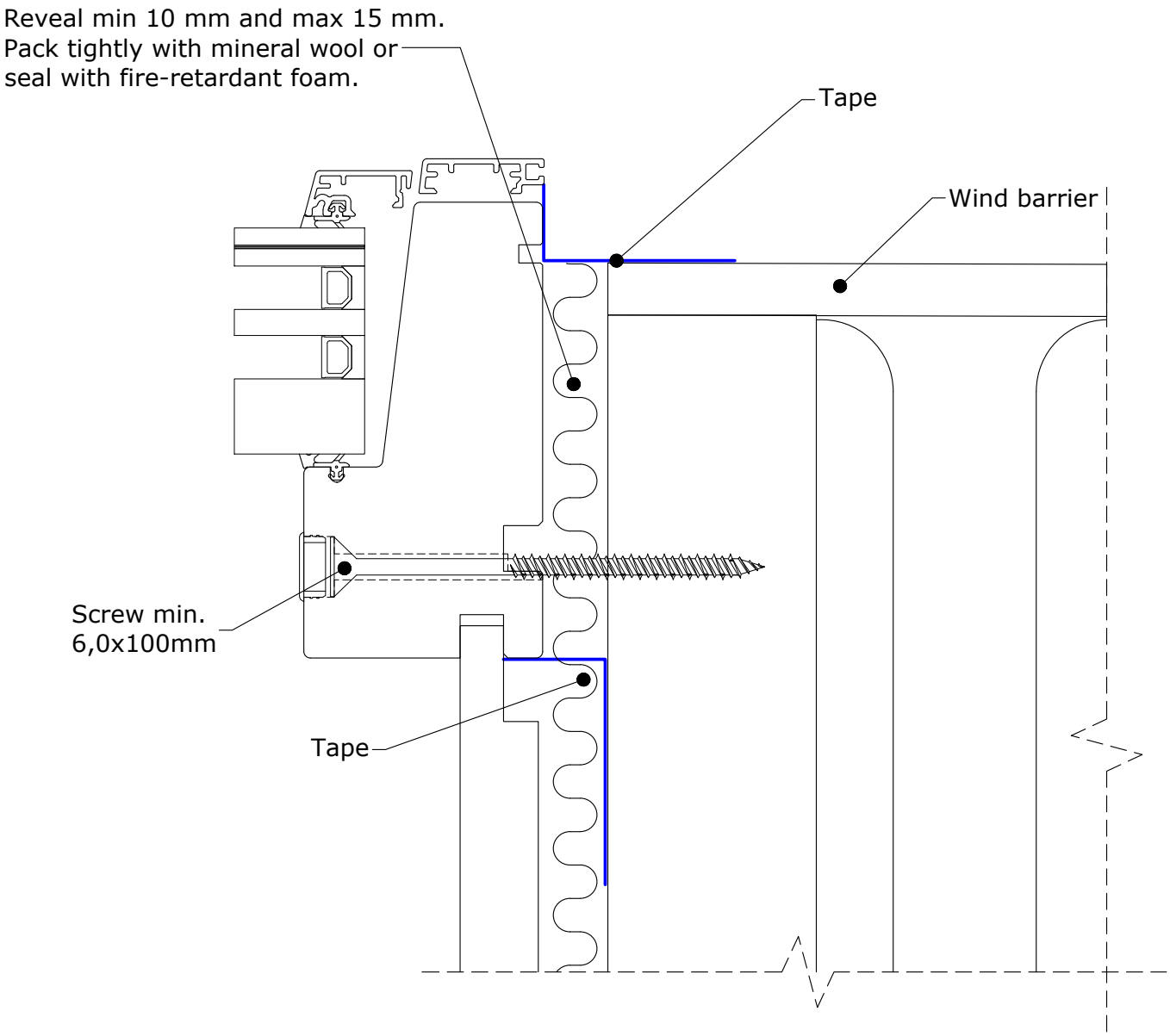

Date.	Design.	Approved.	Ver. no.	Rev. date.	Scale.	Tolerance. ±0,2mm. Any different are defined at drawing	Drawing no.
2.10.2025	KS	-	2	6.11.2026	-		Installation Natre Edge Fire windows V2

Natre Edge Fire rated windows
Installation with tape

Natre Vinduer AS
Engenvein 1
2827 HUNNDALEN
NORWAY

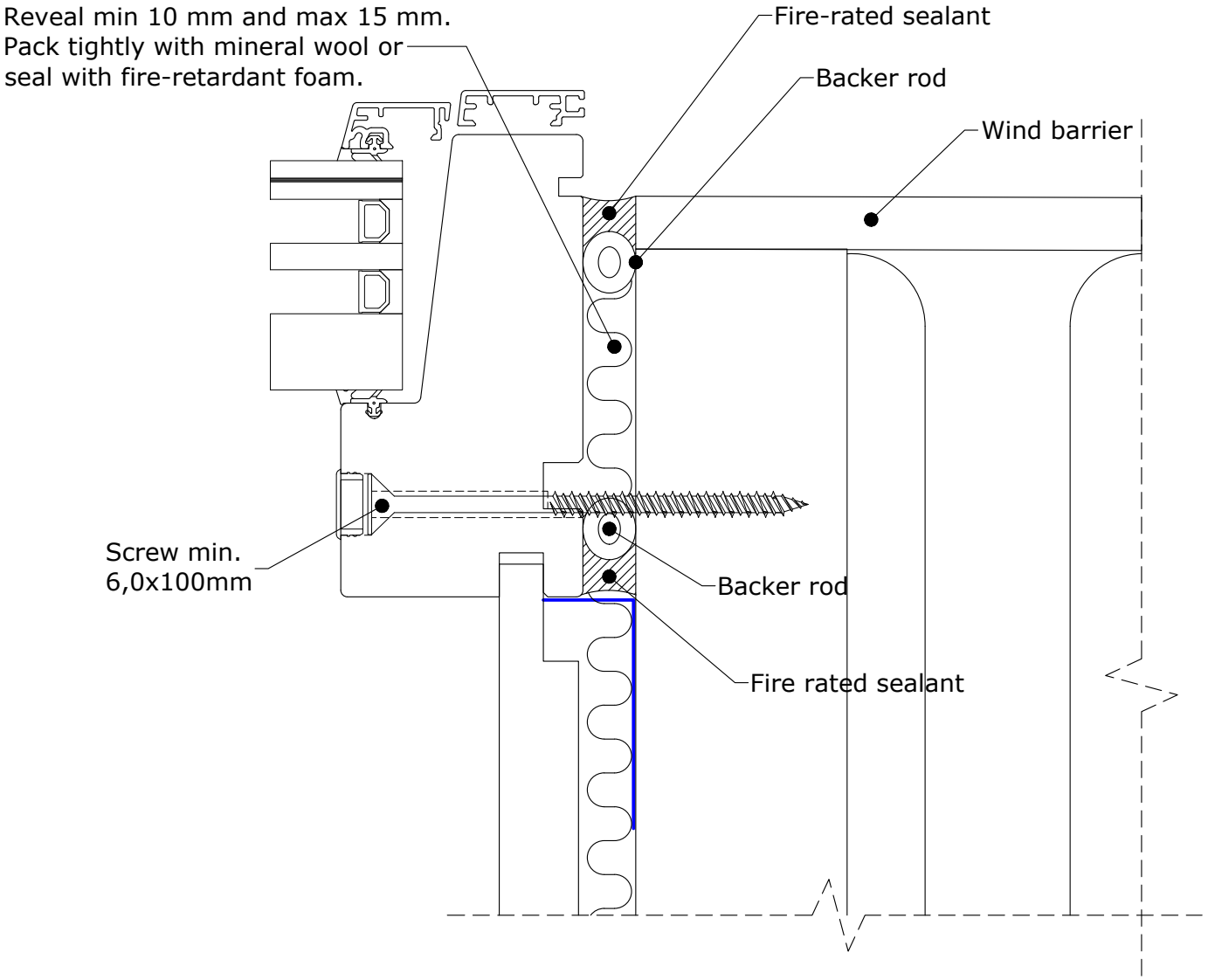

Date.	Design.	Approved.	Ver. no.	Rev. date.	Scale.	Tolerance. ±0,2mm. Any different are defined at drawing	Drawing no.
2.10.2025	KS	-	2	6.11.2026	-		Installation Natre Edge Fire windows V2

Natre Edge Fire rated windows
Installation with backer-rod and sealant

Natre Vinduer AS
Engenvein 1
2827 HUNNDALEN
NORWAY

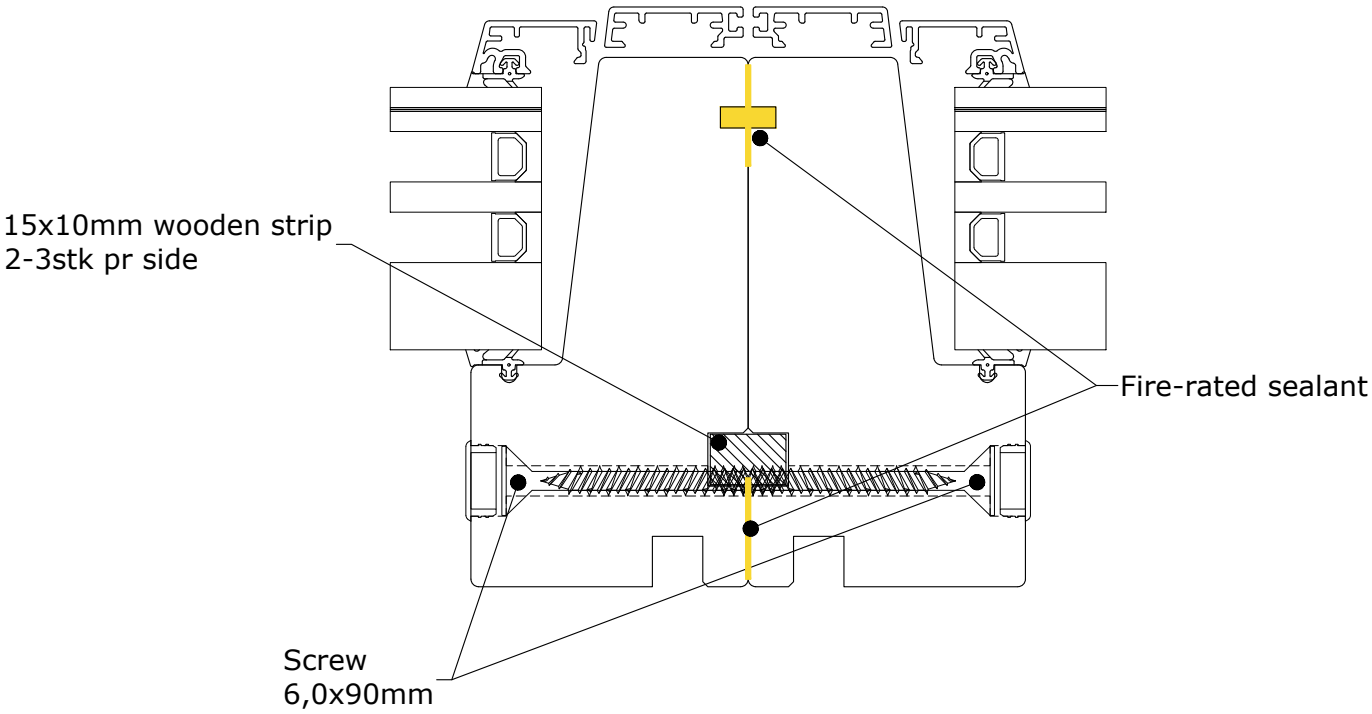

Date.	Design.	Approved.	Ver. no.	Rev. date.	Scale.	Tolerance. ±0,2mm. Any different are defined at drawing	Drawing no.
2.10.2025	KS	-	2	6.11.2026	-		Installation Natre Edge Fire windows V2

Natre Edge Fixed light
Coupling of EI30 & EI60

Natre Vinduer AS
Engenvein 1
2827 HUNNDALEN
NORWAY