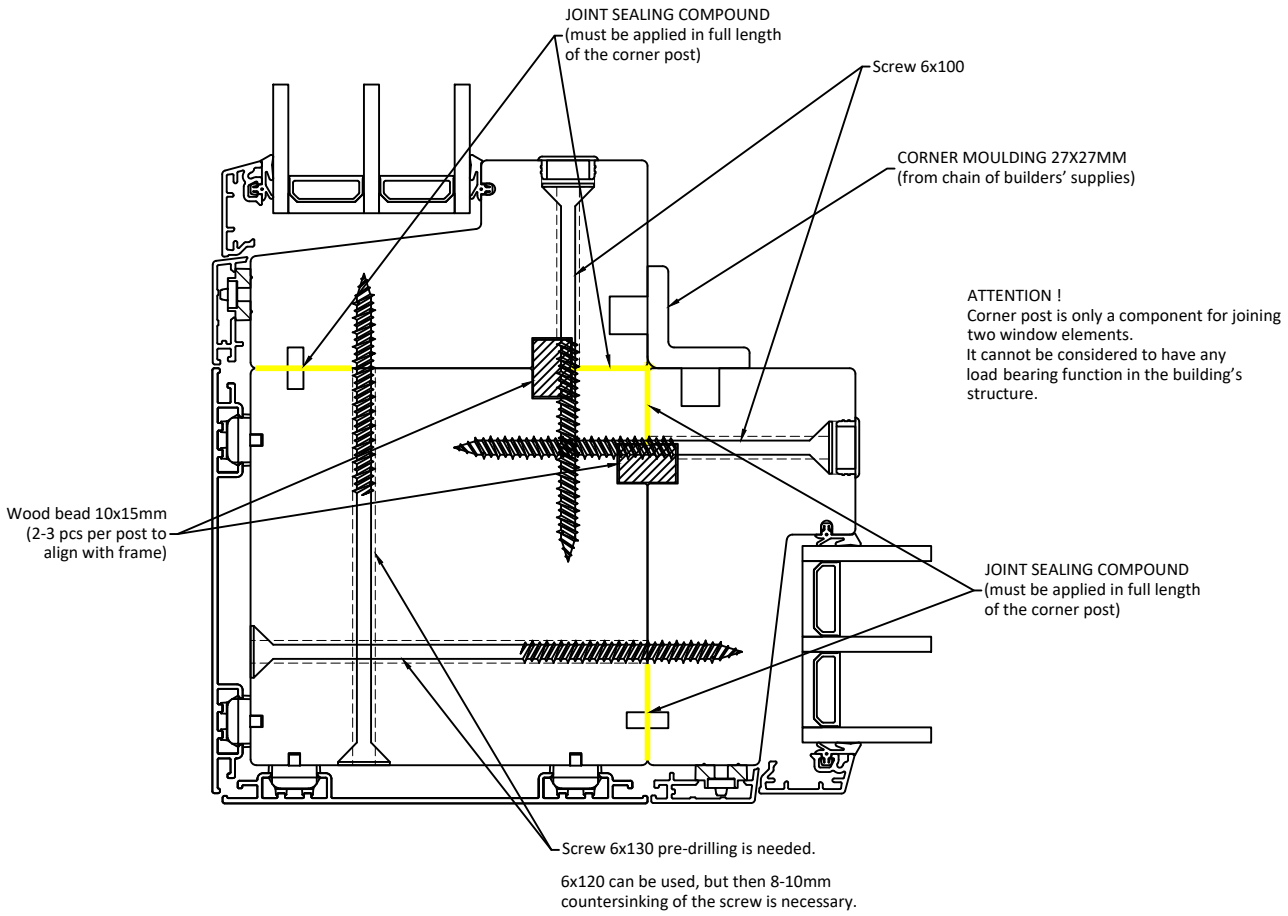

Date.	*Design.*	*Approved.*	*Ver. no.*	*Rev. date.*	*Scale.*	*Tolerance. ±0,2mm. Any different are defined at drawing*	*Drawing no.*
21.10.2025	KS	-	4	6.11.2026	1:2		Installation of windows with Corner post V4

Installation of windows with Corner post

Natre Vinduer AS
Engenvein 1
2827 HUNNDALEN
NORWAY