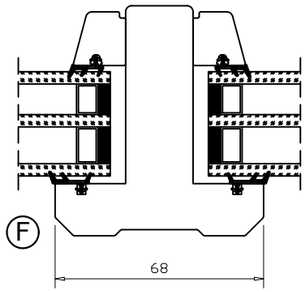

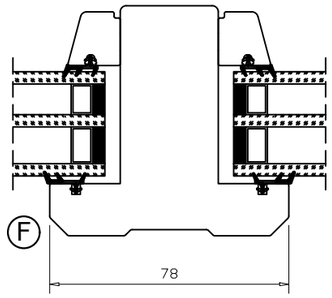

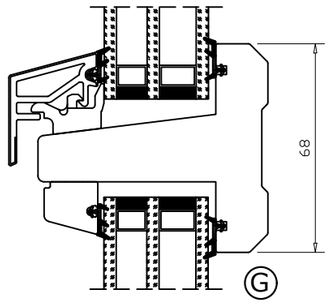

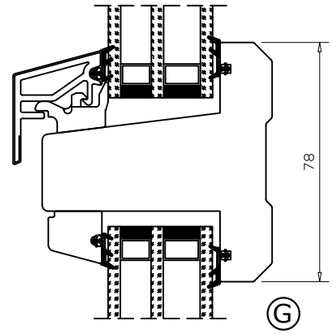

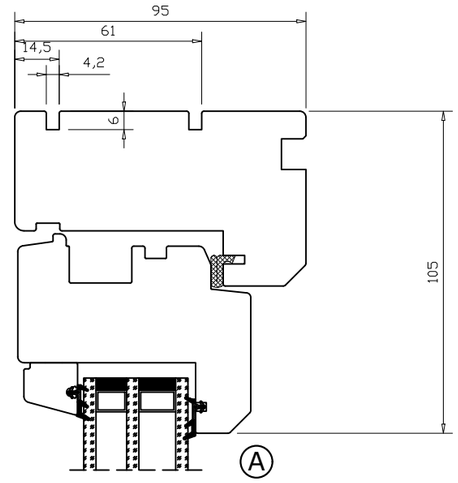

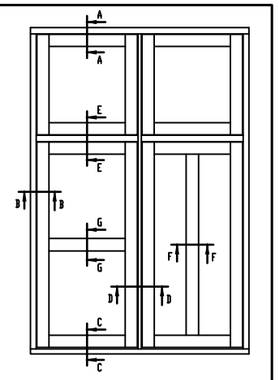

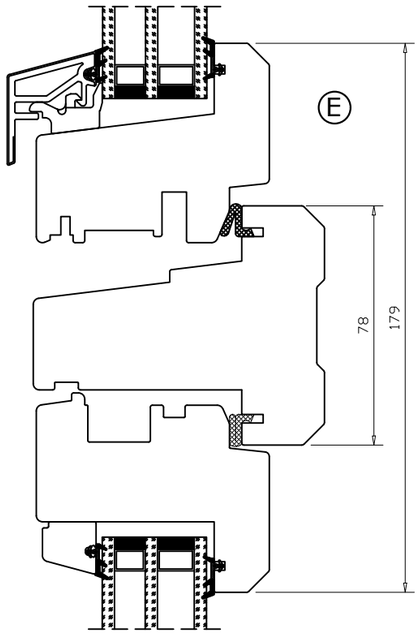

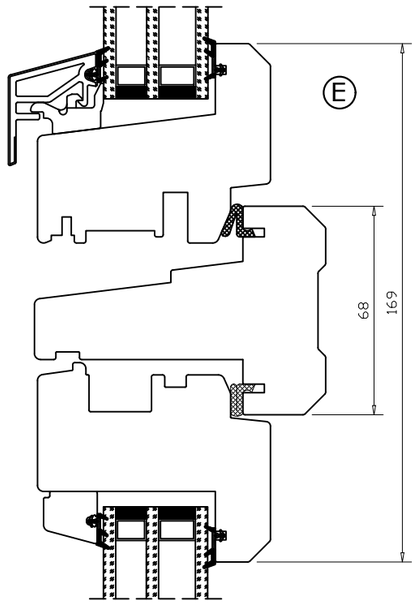

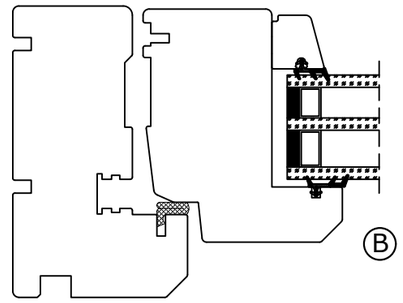

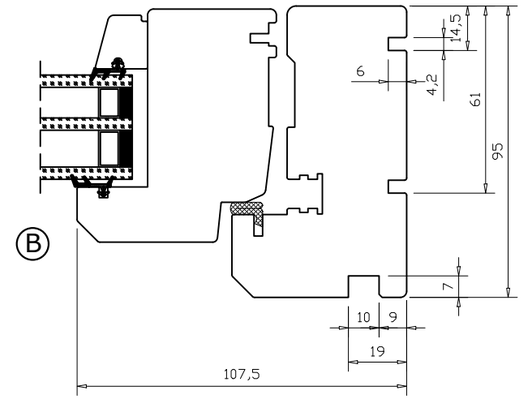

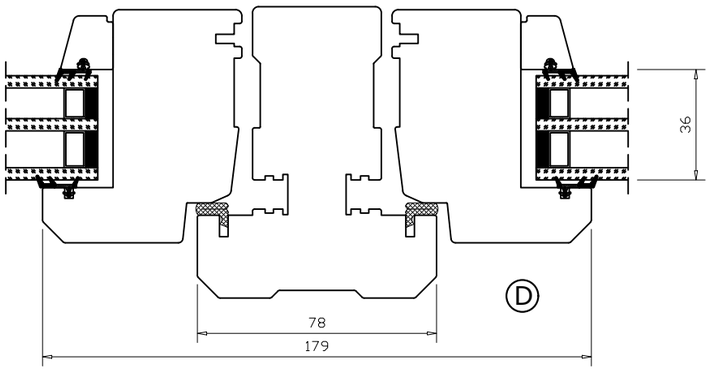

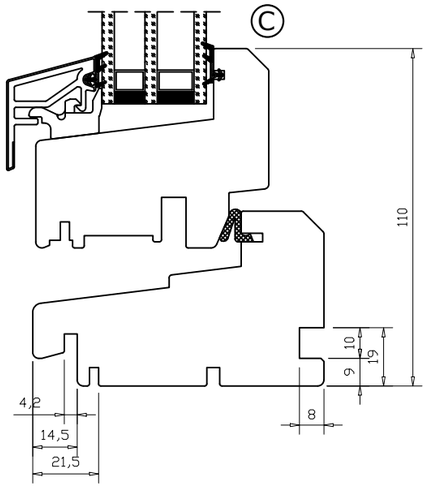

Date.	Design.	Approved.	Ver. no.	Rev. date.	Scale.	Tolerance. ±0,2mm. Any different are defined at drawing	Drawing no.
10.3.2020	KS	-	02	27.4.2022	1:2		K30131105 SH w-w 3-lag 34mm

Natre Klassisk SH vindu
Tre med 3-lag glass (34mm)

Natre Vinduer AS
Engenvein 1
2827 HUNNDALEN
NORWAY

© Natre Vinduer AS All intellectual property rights and all rights in know-how in relation to this drawing may not be reproduced, stored, or transmitted in any form by any means (electronic, mechanical, photocopying, recording or otherwise) without the prior written consent of Natrre Vinduer AS. It is to be used only for the purposes specified by Natre Vinduer AS and for no other purpose.